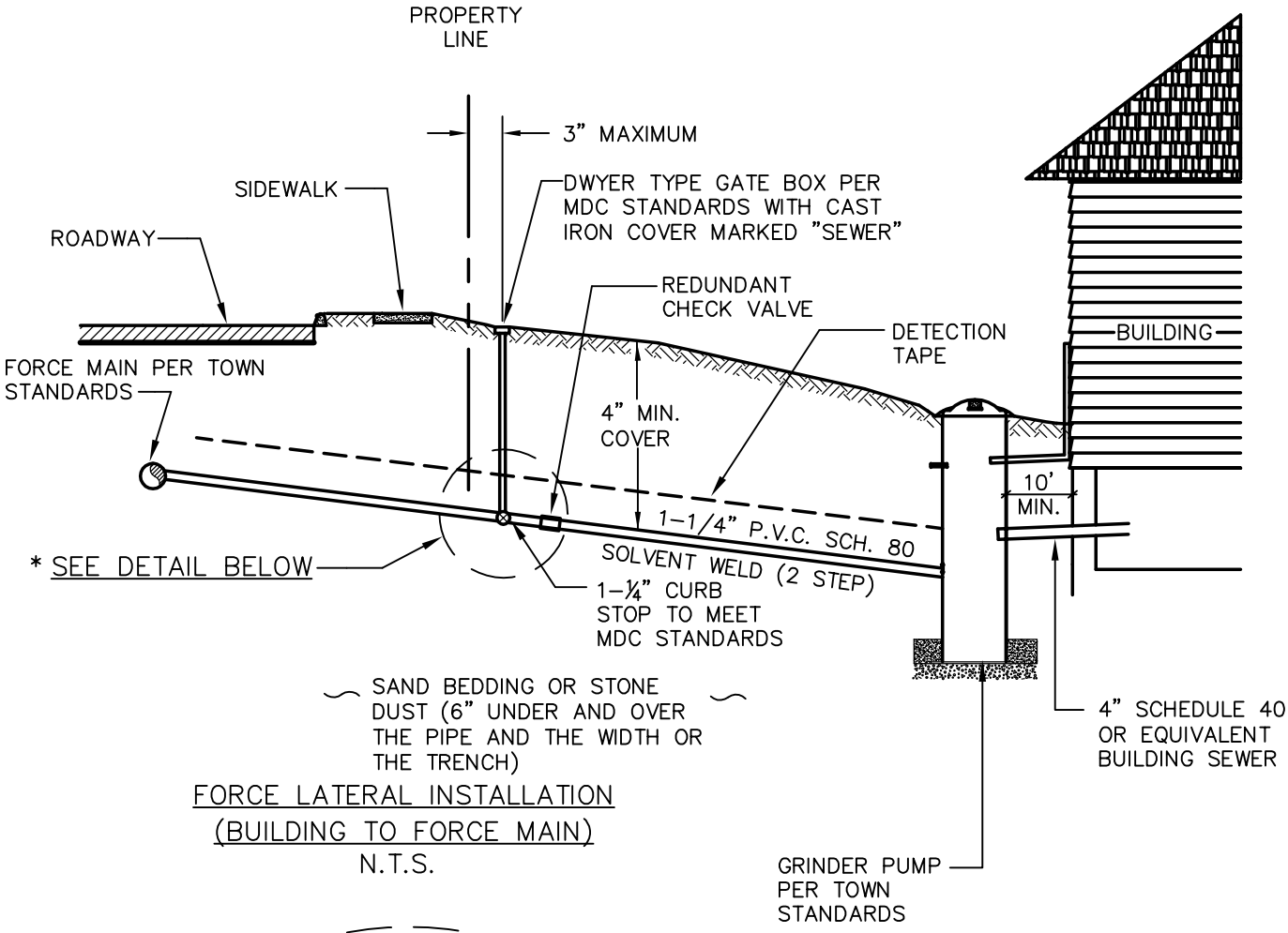

FORCE LATERAL INSTALLATION
(BUILDING TO FORCE MAIN)
N.T.S.

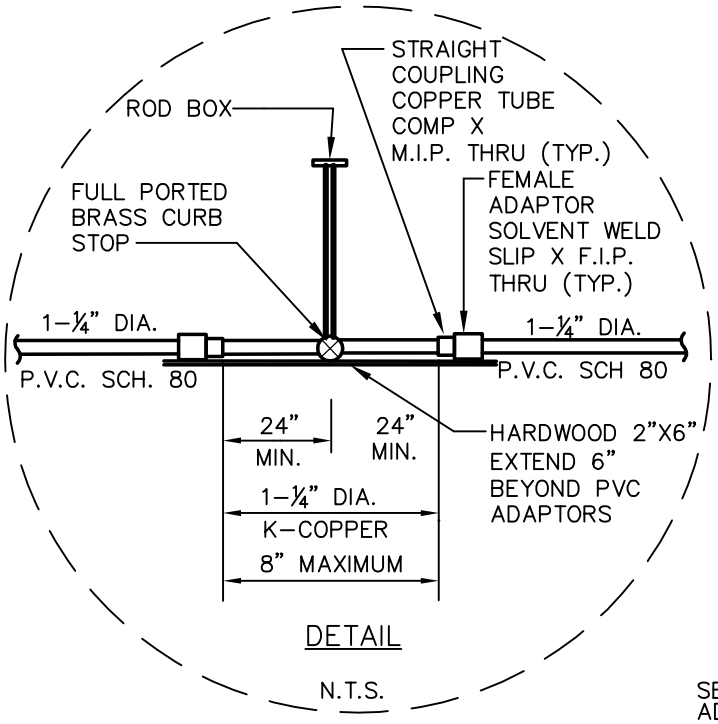

DETAIL
N.T.S.

SEE TOWN OF GLASTONBURY SPECIFICATIONS FOR ADDITIONAL INSTALLATION INFORMATION.

SCALE : NONE	TOWN OF GLASTONBURY DEPARTMENT OF PHYSICAL SERVICES ENGINEERING DIVISION
DRAWN BY: SR	
CHECKED BY: SMB	
APPROVED BY: DAP	FORCE LATERAL CONNECTION TO SEWER FORCE MAIN
LAST REVISED: 4/29/2008	PLATE NO. 45

H:\DWG\Details\TOG\Standard Detail Plates\Plate45-ForcedSewerLateraltoForcemain.dwg