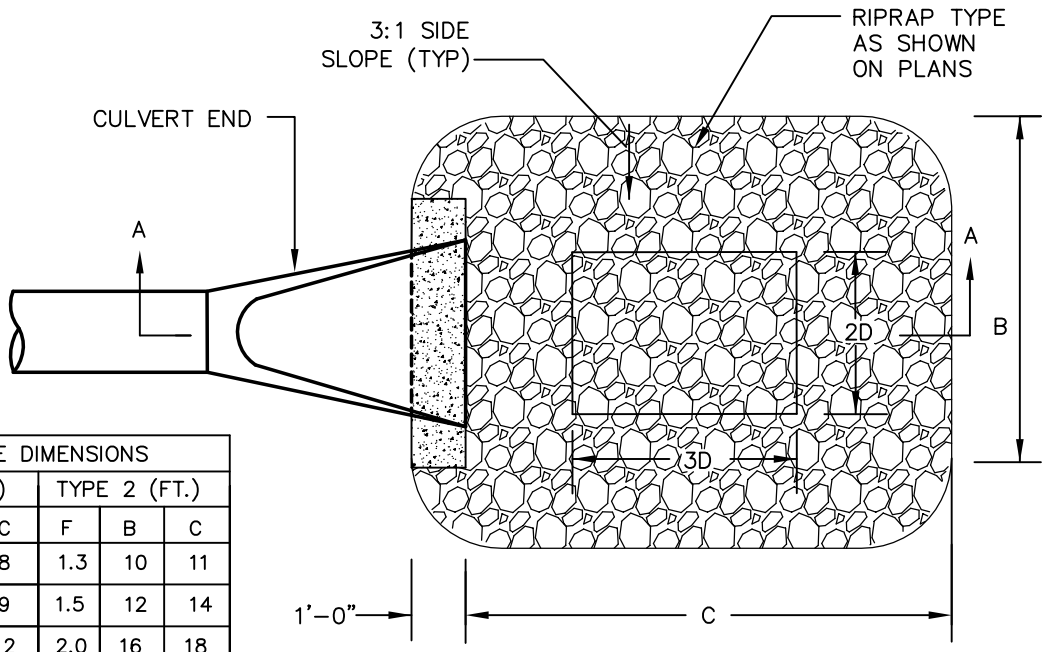

SCOUR HOLE DIMENSIONS						
(IN.)	TYPE 1 (FT.)			TYPE 2 (FT.)		
D	F	B	C	F	B	C
15	0.63	6	8	1.3	10	11
18	0.75	8	9	1.5	12	14
24	1.00	10	12	2.0	16	18
30	1.25	13	15	2.5	20	23
36	1.50	15	18	3.0	24	27
42	1.75	18	21	3.5	28	32
48	2.00	20	24	4.0	32	36
54	2.25	23	27	4.5	36	41
60	2.50	25	30	5.0	40	45

PLAN VIEW

NOTES:

1. DETAIL TO BE USED IN LOCATIONS WHERE FLOWS EXCEED CAPACITY OF RIPRAP APRONS AS PER CONNDOT DRAINAGE MANUAL.
2. RIPRAP SIZE SHALL BE COMPUTED ACCORDING TO CONNDOT DRAINAGE MANUAL SECTION 11.13.

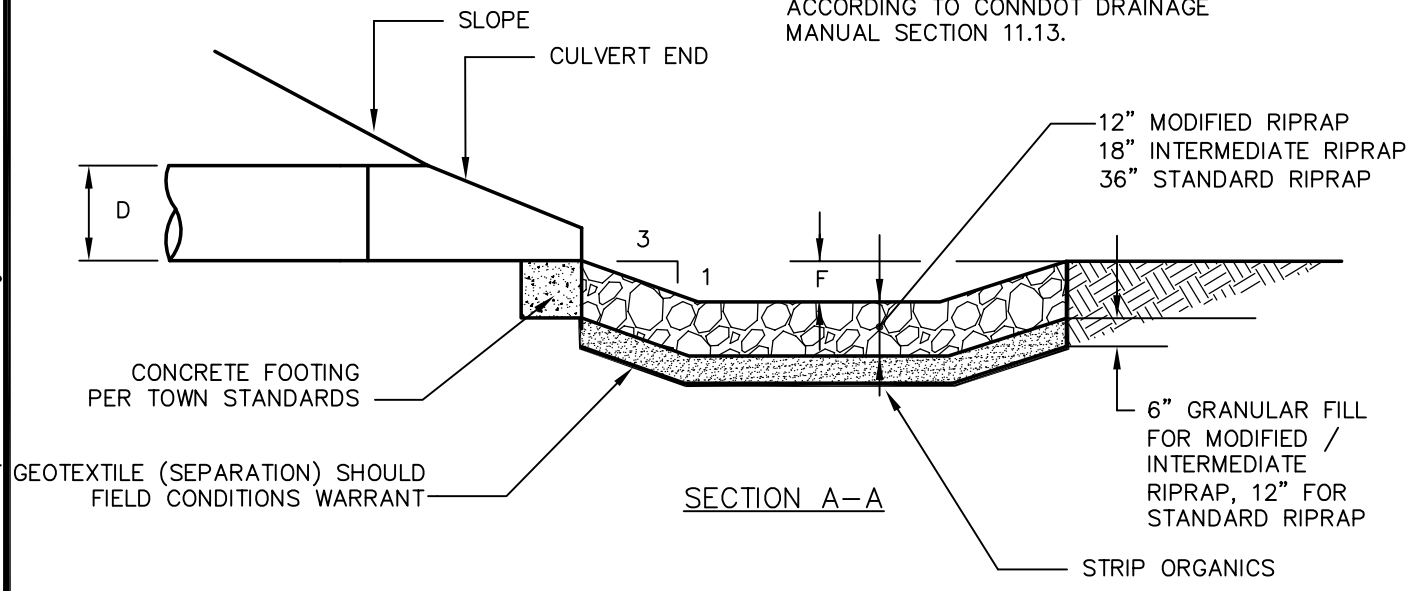

SECTION A-A

SCALE : NONE	
DRAWN BY: SR	
CHECKED BY: SMB	
APPROVED BY: DAP	
LAST REVISED: 3/4/2008	

TOWN OF GLASTONBURY
DEPARTMENT OF PHYSICAL SERVICES
ENGINEERING DIVISION

PREFORMED SCOUR HOLE TYPE 1 & TYPE 2

PLATE NO. 27

H:\DWG\Details\TOG\Standard Detail Plates\Plate27-ScourHole.dwg